SINKA JAPAN CO.,LTD

Ver: 1.1

2011/11/16

PRODUCT: Power Inductor

SERIES: SHC-0402

PACKAGING DIMENSION: [Unit: mm]

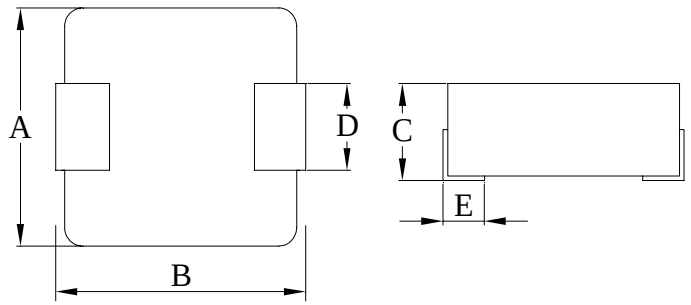

A	4.3 MAX
B	4.7 MAX
C	2.0 MAX
D	1.5±0.3
E	1.27±0.3

GENERAL SPECIFICATIONS:

RoHS COMPLIANT

P/N	L0 Inductance μH ±20% @0A	DCR (mΩ)		Heat Rating Current	Saturation Current
		[Typical]	[Max]	Idc (Amp)	Isat (Amp)
				Typical	MAX
SHC-0402-R47M	0.47	16	18	5.6	11.5
SHC-0402-1R0M	1.0	33	37	3.75	8.5
SHC-0402-1R5M	1.5	36	48	3.5	6
SHC-0402-2R2M	2.2	80	90	2.85	6

◎ All test Data is referenced to 25°C ambient

◎ Typical Heat Rating DC Current would cause an approximately △T of 40°C

◎ Typical Saturation DC Current would cause Lo to drop approximately 25%

△ Operating Temperature Range: -55°C to +125°C